REV.	ECN NO.
00	----------

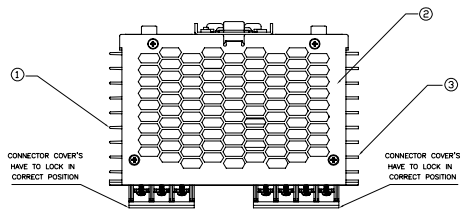

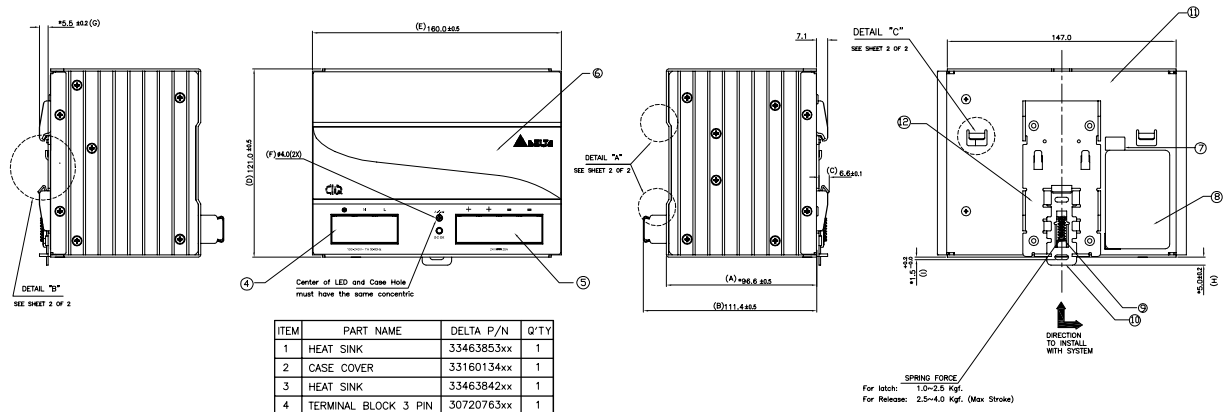

ITEM	PART NAME	DELTA P/N	Q'TY
1	HEAT SINK	33463853xx	1
2	CASE COVER	33160134xx	1
3	HEAT SINK	33463842xx	1
4	TERMINAL BLOCK 3 PIN	30720763xx	1
5	TERMINAL BLOCK 4 PIN	30720765xx	1
6	FRONT LABEL	32625259xx	1
7	CAUTION LABEL	32023152xx	1
8	SPEC LABEL	32630415xx	1
9	SPRING	34620262xx	1
10	LATCH	34600881xx	1
11	CASE CHASSIS	33106746xx	1
12	BASE SPCC	34613030xx	1

NOTES:
1. PRODUCT SURFACE SHOULD BE CLEAN.
2. * IS CRITICAL ASS'Y DIMENSION WHICH MUST BE INSPECTED BY DELTA FQC BEFORE SHIPPING.
3. SPEC LABEL DETAIL AND PRINTING CONTENTS REFER TO SN.
4. MUST MEET DELTA STANDARD : 10000-0162.

台達電子工業股份有限公司 DELTA ELECTRONICS, INC.

DRAWN: | DESIGN:
DATE: | ECN NO.:

THESE DRAWINGS AND SPECIFICATIONS ARE THE PROPERTY OF DELTA ELECTRONICS, INC. AND SHALL NOT BE REPRODUCED OR USED AS THE BASIS FOR THE MANUFACTURE OR SELL OF APPARATUSES OR DEVICES WITHOUT PERMISSION.

DIMENSIONAL TOLERANCES

( )		( )		( )		( )		ANGLES	
DECIMALS	<50	±0.1	<50	±0.15	<50	±0.2	<30°	±0.1°
X ±0.3	>50~500	±0.15	>50~500	±0.2	>50~500	±0.25	>30°~60°	±0.5°
X.X ±0.2	>100~200	±0.2	>100~200	±0.25	>100~200	±0.3	>60°~90°	±0.5°
X.XX ±0.1	>200~	±0.2%	>200~	±0.25%	>200~	±0.3%		

DRAWING NAME: PHYSICAL DIMENSION OF POWER SUPPLY
A3 SIZE | THIRD ANGLE PROJECTION | PART NO.: DRP024V480W1AA | REV. 01
USED ON | UNIT mm | SCALE | SHEET 1 OF 2

DF-MEA3H-3R01

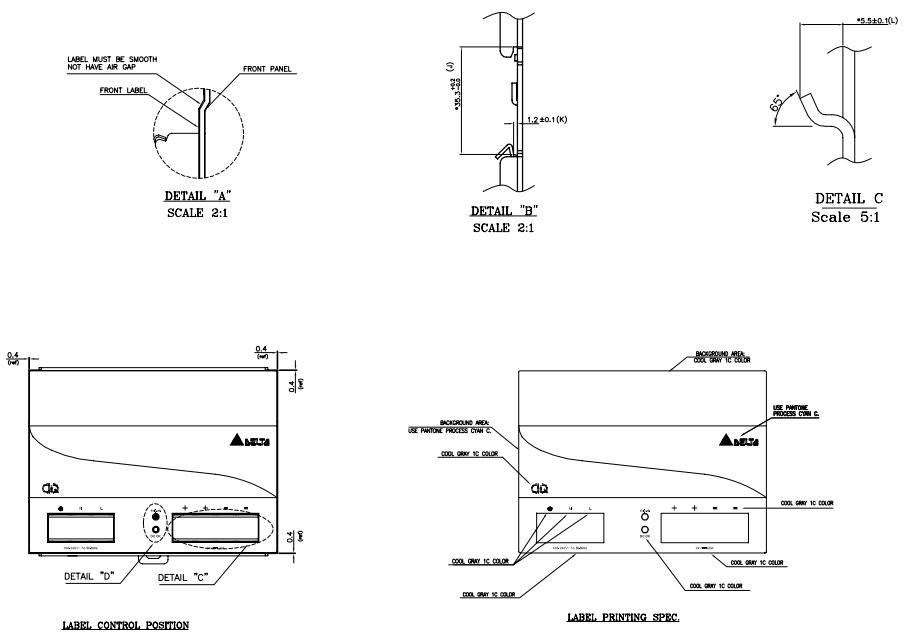

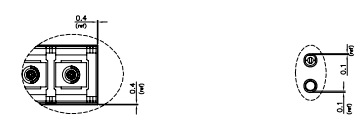

REV.	ECN NO.
00	----------

台達電子工業股份有限公司 DELTA ELECTRONICS, INC.

DRAWN: | DESIGN:
DATE: | ECN NO.:

THESE DRAWINGS AND SPECIFICATIONS ARE THE PROPERTY OF DELTA ELECTRONICS, INC. AND SHALL NOT BE REPRODUCED OR USED AS THE BASIS FOR THE MANUFACTURE OR SELL OF APPARATUSES OR DEVICES WITHOUT PERMISSION.

DIMENSIONAL TOLERANCES

( )		( )		( )		( )		ANGLES	
DECIMALS	<50	±0.1	<50	±0.15	<50	±0.2	<30°	±0.1°
X ±0.3	>50~500	±0.15	>50~500	±0.2	>50~500	±0.25	>30°~60°	±0.5°
X.X ±0.2	>100~200	±0.2	>100~200	±0.25	>100~200	±0.3	>60°~90°	±0.5°
X.XX ±0.1	>200~	±0.2%	>200~	±0.25%	>200~	±0.3%		

DRAWING NAME: PHYSICAL DIMENSION OF POWER SUPPLY
A3 SIZE | THIRD ANGLE PROJECTION | PART NO.: DRP024V480W1AA | REV. 00
USED ON | UNIT mm | SCALE | SHEET 2 OF 2

DF-MEA3H-3R01